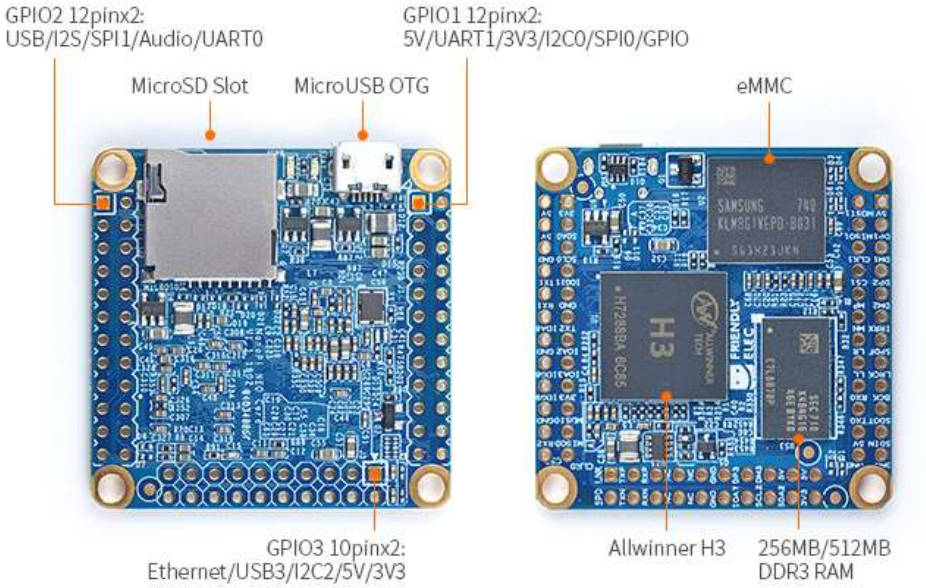
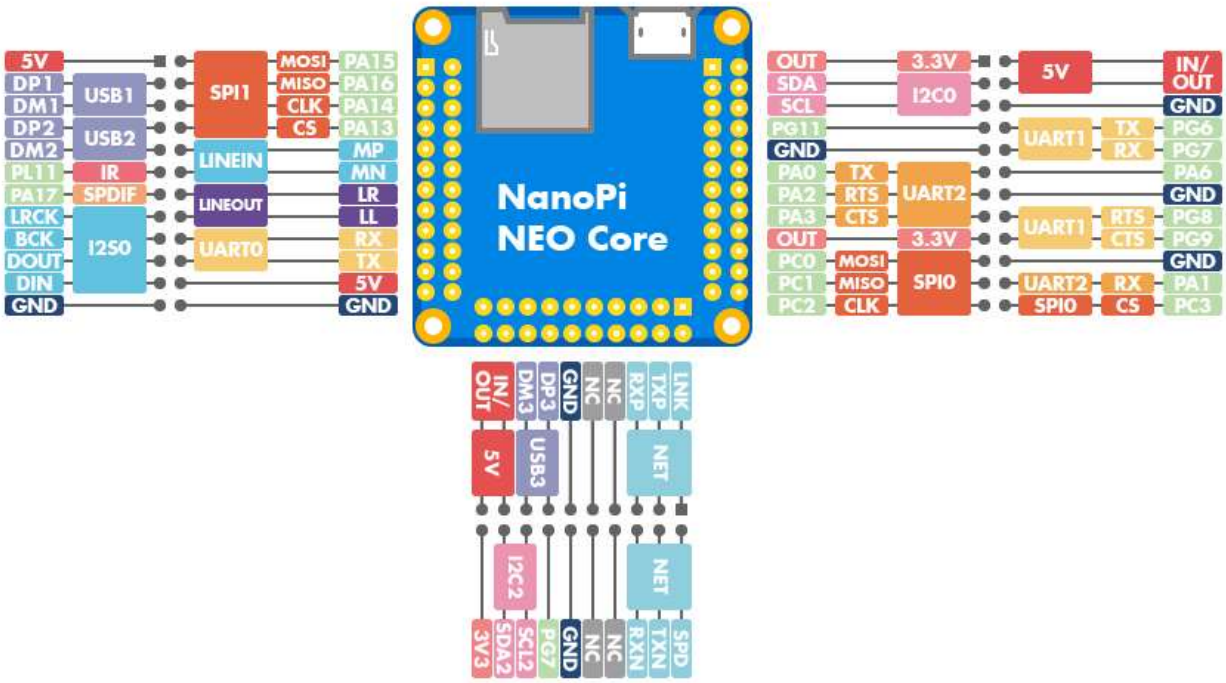
NanoPi NEO Core pinout diagram